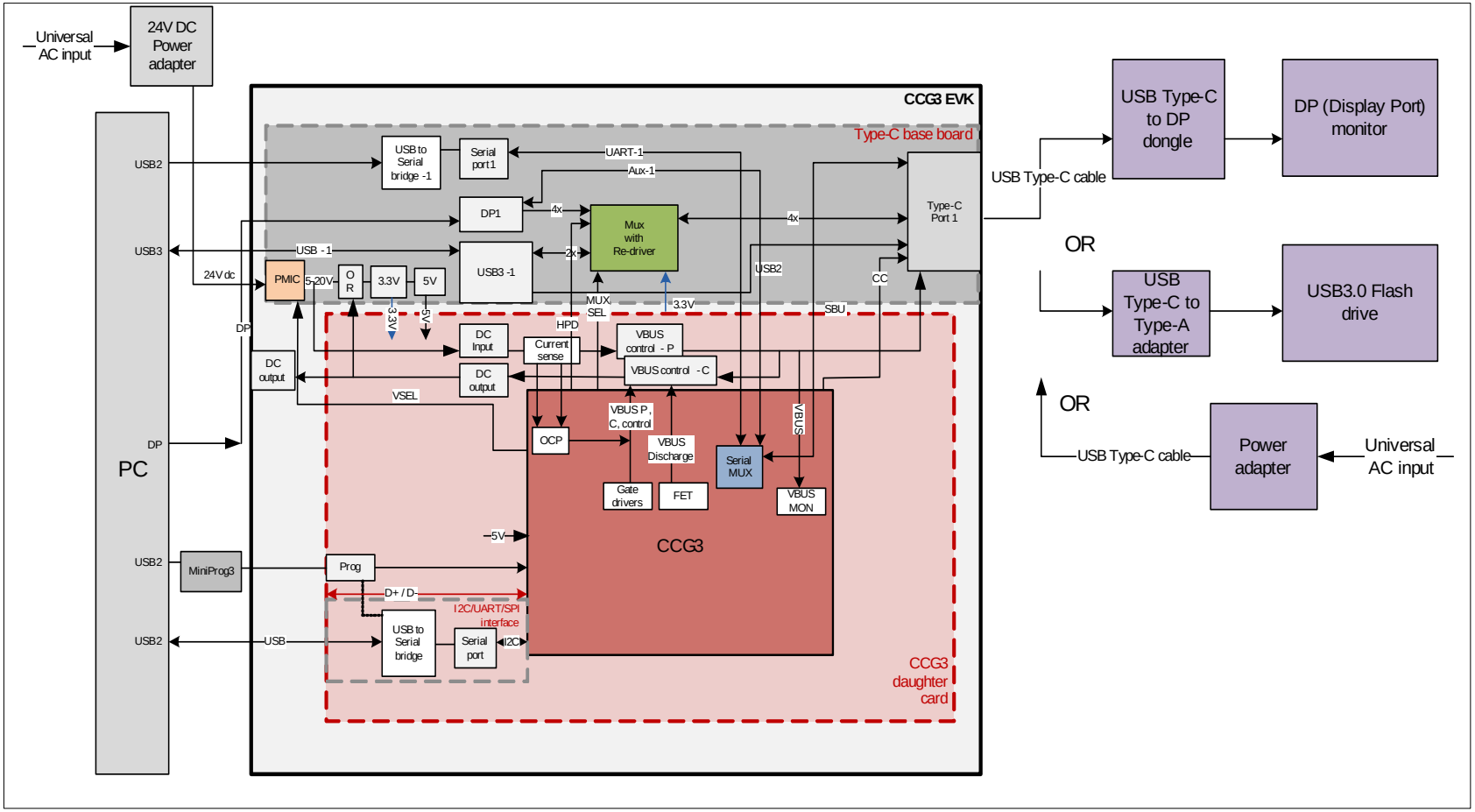

PCA: 121-60305-01
PCB: 600-60327-01
FAB DRW: 610-60301-01
ASSY DRW: 620-60309-01

CYPRESS SEMICONDUCTOR © 2016

Title
CY4531 CCG3 DAUGHTER CARD - OVERALL DIAGRAM

Size	Document Number	Rev
A	630-60307-01	4.0

Date: Friday, May 27, 2016 Sheet 1 of 6

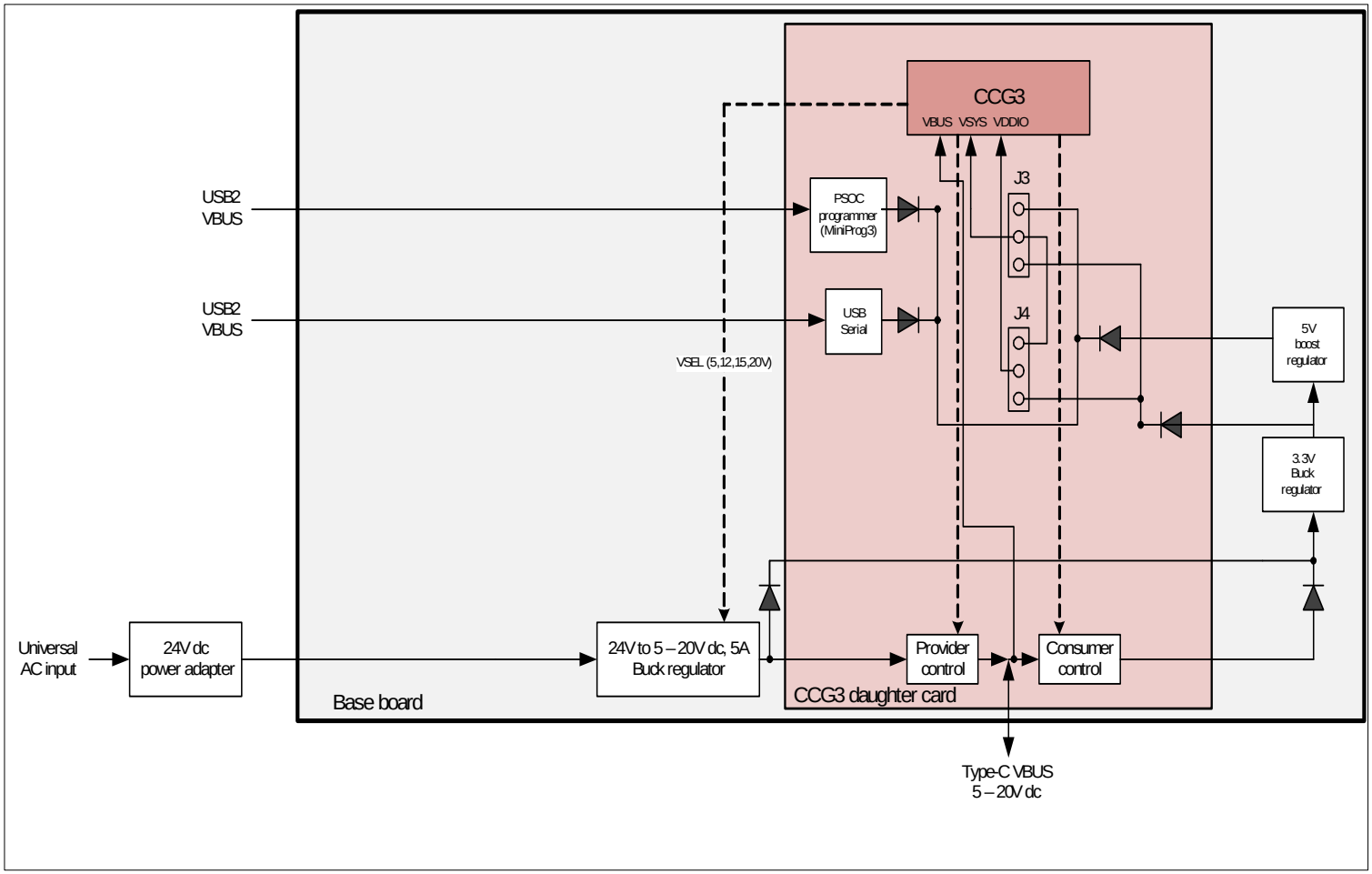

PCA: 121-60305-01
PCB: 600-60327-01
FAB DRW: 610-60301-01
ASSY DRW: 620-60309-01

CYPRESS SEMICONDUCTOR © 2016

Title
CY4531 CCG3 DAUGHTER CARD - POWER DISTRIBUTION

Size	Document Number	Rev
A	**630-60307-01**	4.0

Date: Friday, May 27, 2016 Sheet 2 of 6

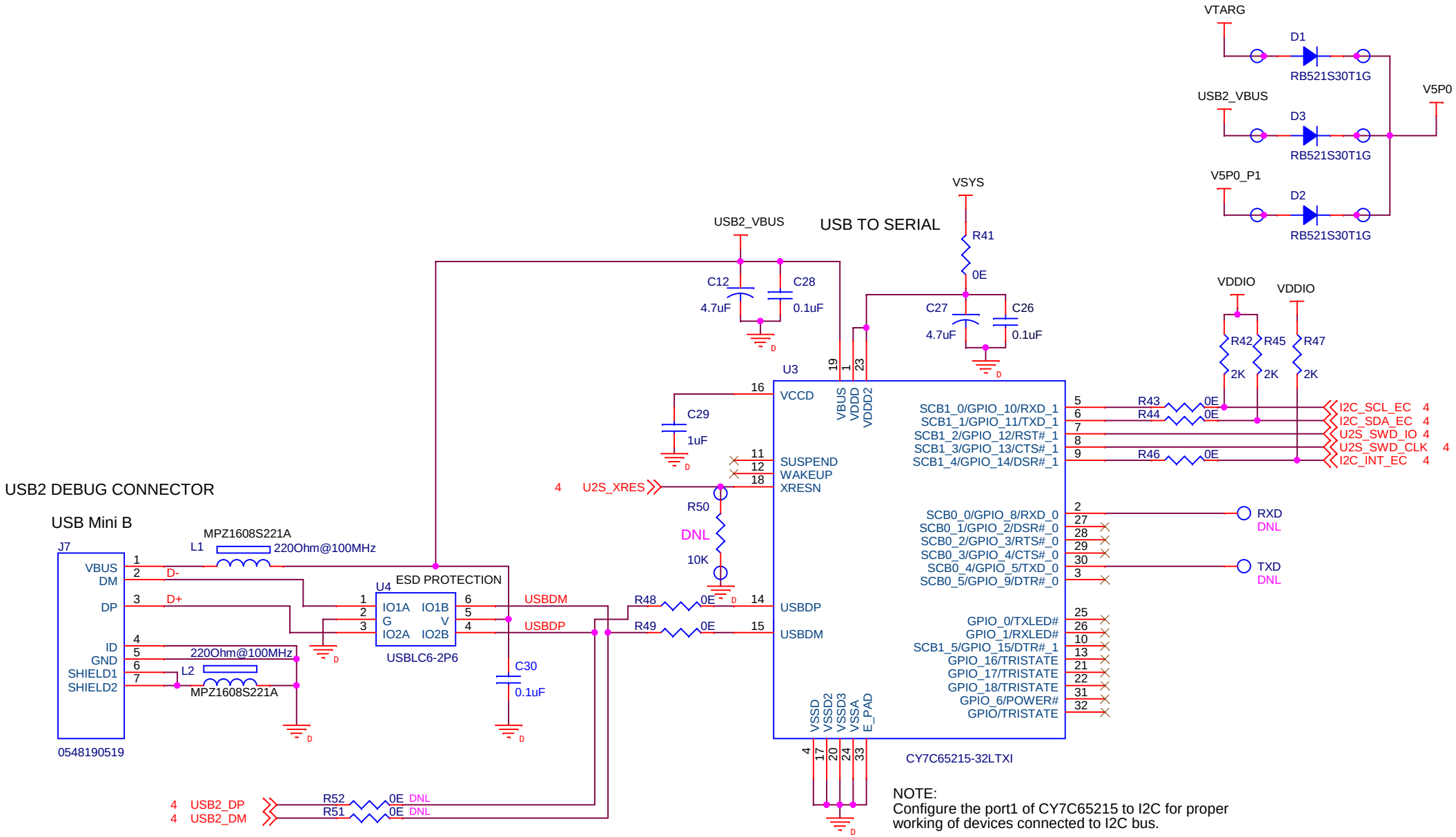

PCA: 121-60305-01
PCB: 600-60327-01
FAB DRW: 610-60301-01
ASSY DRW: 620-60309-01

CYPRESS SEMICONDUCTOR © 2016

Title: **CY4531 CCG3 DAUGHTER CARD - USB TO SERIAL**

Size	Document Number	Rev
A4	**630-60307-01**	4.0

Date: Monday, May 30, 2016 Sheet 3 of 6

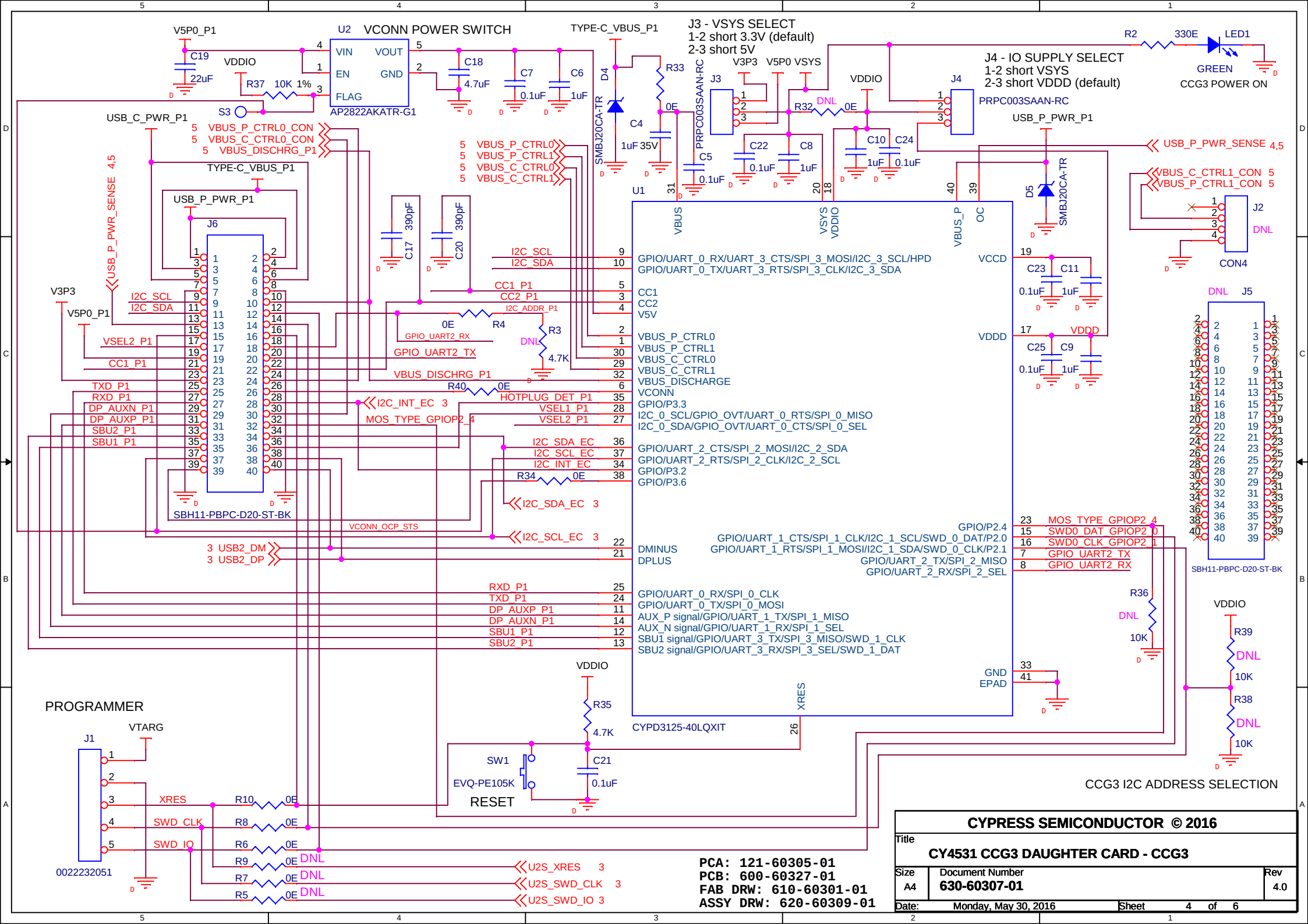
U2 VCONN POWER SWITCH
AP2822AKATR-G1
J3 - VSYS SELECT
1-2 short 3.3V (default)
2-3 short 5V
J4 - IO SUPPLY SELECT
1-2 short VSYS
2-3 short VDDD (default)
CCG3 POWER ON
U1
CYPD3125-40LQXIT
SBH11-PBPC-D20-ST-BK
PRPC003SAAN-RC
SMBJ20CA-TR
CON4
PROGRAMMER
0022232051
RESET
EVQ-PE105K
CCG3 I2C ADDRESS SELECTION
CYPRESS SEMICONDUCTOR © 2016
CY4531 CCG3 DAUGHTER CARD - CCG3
PCA: 121-60305-01
PCB: 600-60327-01
FAB DRW: 610-60301-01
ASSY DRW: 620-60309-01
Document Number 630-60307-01
Rev 4.0
Date: Monday, May 30, 2016
Sheet 4 of 6

Ensure layout is suitable for 5A continuous current for below path
USB_P_PWR_P1, TYPE-C_VBUS_P1, USB_C_PWR_P1

OVER CURRENT SENSE

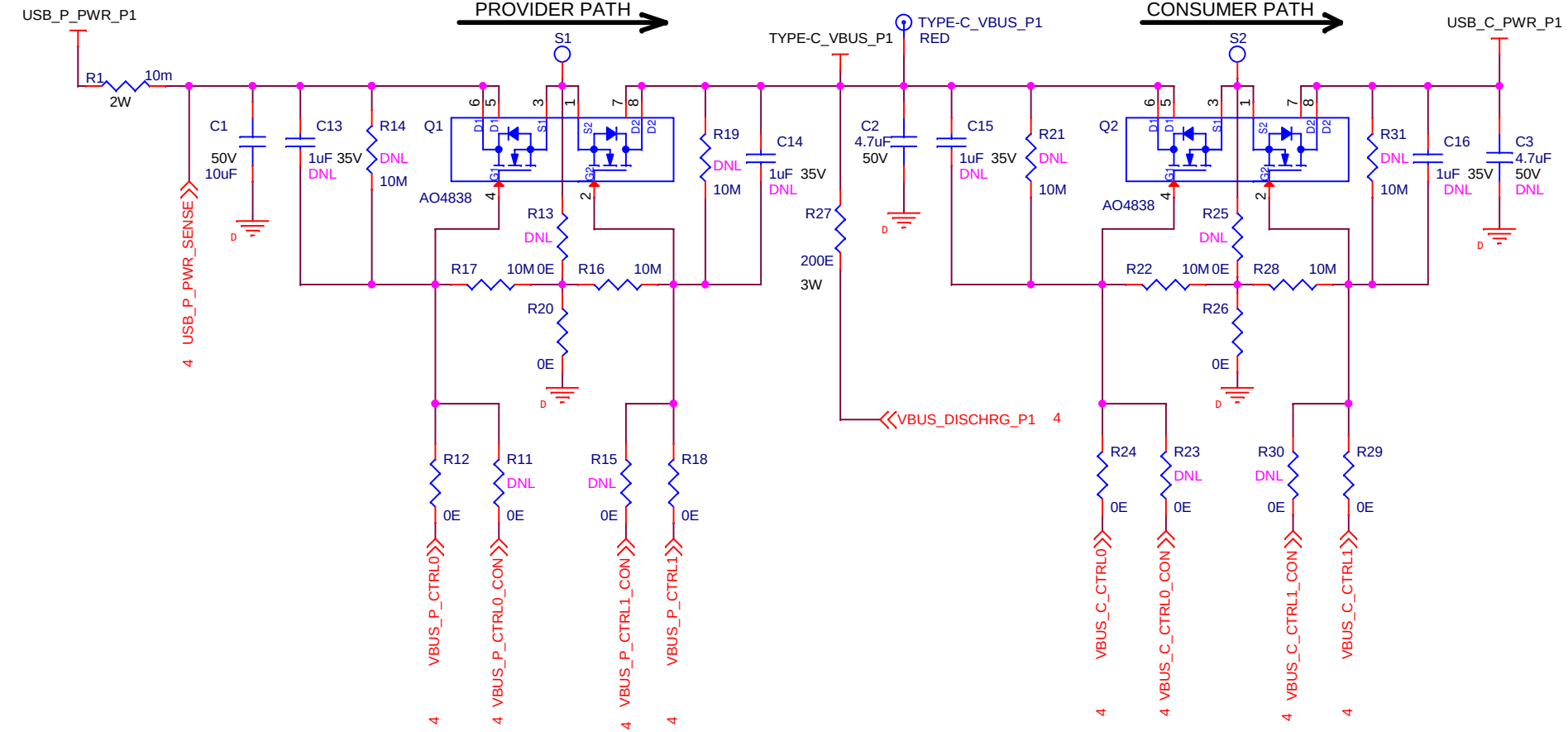

DEFAULT SETTING

Q1 Q2	R14,R19 R21,R31	R16,R17,R20 R22,R26,R28
PMOSFET	LOAD	DO NOT LOAD
NMOSFET	DO NOT LOAD	LOAD

PCA: 121-60305-01
PCB: 600-60327-01
FAB DRW: 610-60301-01
ASSY DRW: 620-60309-01

CYPRESS SEMICONDUCTOR © 2016

Title: **CY4531 CCG3 DAUGHTER CARD - MOSFET PORT1**

Size	Document Number	Rev
A4	**630-60307-01**	4.0

Date: Monday, May 30, 2016 Sheet 5 of 6

Revision	Description of the change
2.0	1. XRES PULL UP POWER CHANGED TO VDDIO FROM VSYS 2. R35,C21 VALUE CHANGED AS 100K AND 1uF 3. TEST POINT ADDED FOR U2 3rd (FLAG) PIN 4. R36 10K PULL DOWN RESISTOR ADDED FOR GPIO2_4 5. PAGE5 MOSFET CIRCUIT CONNECTION CHANGED (R13,R14,R16,R17,R19,R20,R21,R22,R25,R26, R28,R31 ADDED) 6. D4, R33 CONNECTION CHANGED 7. U3 1,23 PINS POWER CHANGED AS VSYS AND ADDED OE RESISTOR R41.
3.0	1. R36 MARKED AS DNL 2. R40 DNL REMOVED 3. J3, J4 CONNECTION CHANGED. 4. VCONN OCP FLAG STATUS (FROM U2) CONNECTED TO U1.38 THROUGH R34. 5. U2 FLAG PULLUP CONNECTION CHANGED TO VDDIO.
4.0	1. R35 VALUE CHANGED FROM 100K TO 4.7K. 2. C21 VALUE CHANGED FROM 1uF TO 0.1uF. 3. C19 VALUE CHANGED FROM 4.7uF TO 22uF. 4. C18 VALUE CHANGED 1uF TO 4.7uF. 5. C3 MARKED AS DNL. 6. C17 AND C20 CHANGED FROM 330pF TO 390pF. 7. Q1,Q2 PART NUMBER CHANGES AS "AO4838".

PCA: 121-60305-01
PCB: 600-60327-01
FAB DRW: 610-60301-01
ASSY DRW: 620-60309-01

CYPRESS SEMICONDUCTOR © 2016

Title: CY4531 CCG3 DAUGHTER CARD - REV HISTORY

Size	Document Number	Rev
A4	630-60307-01	4.0

Date: Friday, June 17, 2016 Sheet 6 of 6